VITEK

VTC-C770DN

700TVL True Day and Night (ICR) Camera

- 1/3" Sony High Density EXVIEW CCD
- Sony Effio Digital Signal Processor
- 700TVL High Resolution
- .003Lux (F1.2@50IRE)
- Supports C/CS mount DC drive lenses
- Supports NTSC & PAL Standards
- Adaptive Tone Reproduction
- 2DNR - Two Dimensional Motion Adaptive Noise Reduction
- Motion Detection
- Privacy Mask
- On Screen Display (OSD) Menu
- 24VAC/12DC Dual Voltage

WARNING To prevent fire or shock hazard, do not expose the unit to rain or moisture.

This symbol is intended to alert the user to the presence of important operating and maintenance (servicing) instructions in the literature accompanying the unit.

This symbol is intended to alert the user to the presence of un-insulated "dangerous voltage" within the product's enclosure that may be of sufficient magnitude to constitute a risk of electric shock to a person.

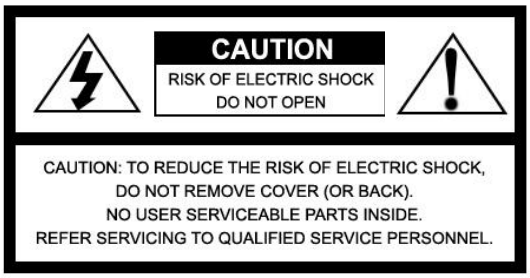

Caution

To prevent electric shocks and risk of fire hazards, do NOT use other than specific power source.

Warning (NTSC version) -- This equipment has been tested and found to comply with the limits for a Class A digital device, pursuant to part 15 of the FCC Rules. These limits are designed to provide reasonable protection against harmful interference when the equipment is operated in a commercial environment. This equipment generates, uses, and can radiate radio frequency energy and, if not installed and used in accordance with the instruction manual, may cause harmful interference to radio communications. Operation of this equipment in a residential area is likely to cause harmful interference in which case the user will be required to correct the interference at their expense.

Caution -- Any changes or modifications in construction of this device that are not expressly approved by the party responsible for compliance, could void the user's authority to operate the equipment.

Table of contents

1. Safety Instructions and Notes

• Read instructions carefully before putting the camera into operation.
• Keep the operating instructions in a safe place for later use.
• The Standard Box Camera is designed for indoor use only and it must not be installed where exposed to rain and moisture.
• Do not operate the cameras beyond their specified temperature, humidity or power ratings.
• Never open the case of the camera because there are precision parts inside. An accident may result.
• Do not put anything metallic or foreign through the vent. A fire or electric shock may result.
• Be sure to turn off the power before installing or making connection.
• Pay attention when laying the connection cable and observe that the cable is not subject to heavy loads, kinks or damage and no moisture can get in.
• Do not install the camera in places exposed to vibrations and shocks.
• Be very careful not to drop or shock the camera while carrying it.
• Do not angle the camera to the sun.
• Do not make any modification to the unit (neither to the software nor the hardware). Improper modification voids the warranty and can cause malfunctions or damages. The manufacturer accepts no liability for damages resulting from unauthorized or improper modifications to the unit.
• Some types of lenses may cause hunting, light amount drop or other problems. In such case, readjust the lenses.
• Because of the digital image device characteristics, images may look rugged at high temperatures. This does not mean the camera is in trouble.
• The warranty becomes void if repairs are attempted by unauthorized persons.
• Contact the supplier if any functional problems arise.

Cleaning:
• Do not touch the surface of the imaging device.
• Keep front and rear lens surfaces clean.

Notice -- The images used in this manual are processed to help comprehension and may differ from actual video of the camera.

2. General Descriptions

VTC-C770DN (VTC-C770DN/PAL for PAL) is an ultra clear resolution camera that achieves 700TVL resolution and a crisp color reproduction with the use of Sony 960H EX-view CCD and Effio-E image signal processor.

With Effio-E digital imaging system,
- Delivers crystal clear images with 700TVL resolution that accurately capture every aspect of any scene
- Color signal processing provides the optimum balance between the luminance and chroma signals for high color reproducibility. It even captures detailed scenes that contain very high spatial frequency.
- Incorporates 2-D noise reduction signal processing

With ICR mechanism,
- Enhances its sensitivity about 10x at night
- Accepts infrared light

With 24VAC/12VDC dual power design,
- Offers flexibility of installation
- Ensures reliability

Main features are:

- 1/3" Sony High Density EXVIEW CCD
- Sony Effio Digital Signal Processor
- 700TVL High Resolution
- 0.003Lux (F1.2@50IRE)
- Supports C/CS mount DC drive lenses
- Supports NTSC & PAL Standards
- Adaptive Tone Reproduction
- 2DNR - Two Dimensional Motion Adaptive Noise Reduction
- Motion Detection
- Privacy Mask
- On Screen Display (OSD) Menu
- 24VAC/12DC Dual Voltage

3. Supplied Items

1 x ULTRACLEAR RESOLUTION Color Camera
1 x Dust protection cap
1 x Installation and Operating Instructions

4. Part Names

4.1 Front view

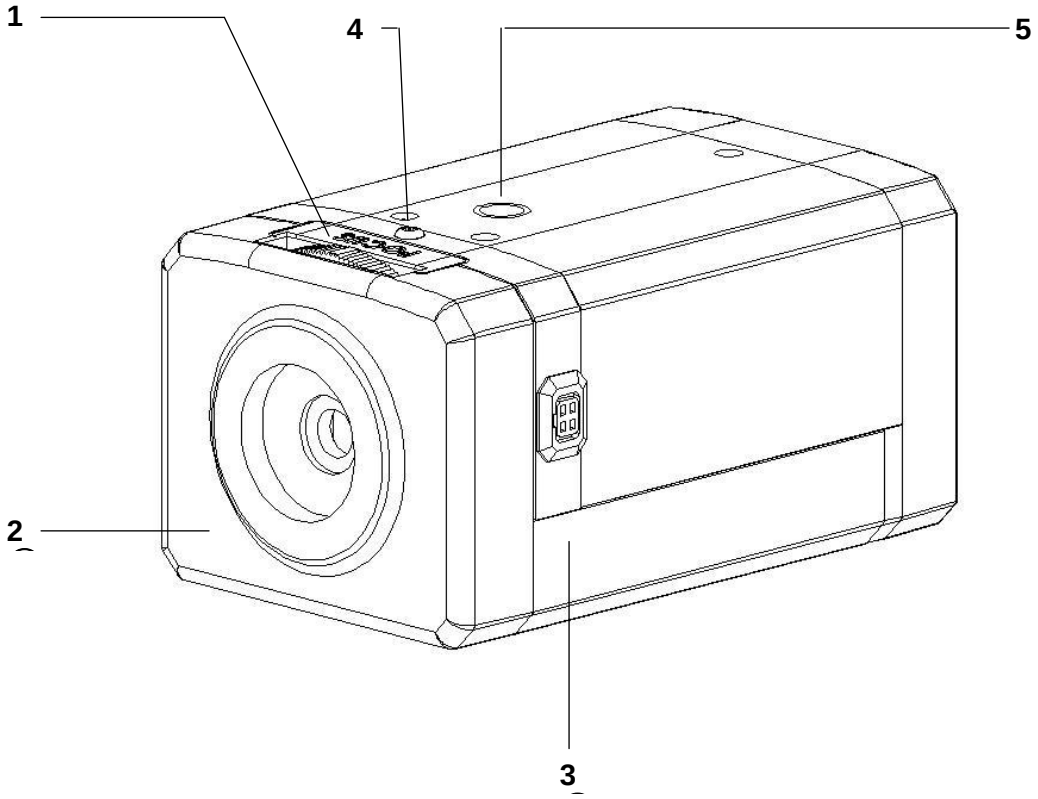

1 Back Focus Adjustment
2 Dust Protection Cap
3 Lens connector for auto iris lenses
4 Back focus Adjustment Lock Screw
5 Camera Mount Hole (Top and Bottom)

Lens Connector for Auto-iris lens (DC Drive)

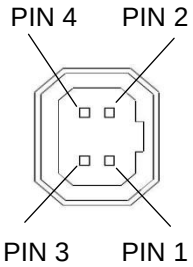

PIN No	DC Iris
1	Damp(-)
2	Damp(+)
3	Drive(+)
4	GND

4.2 Rear side view

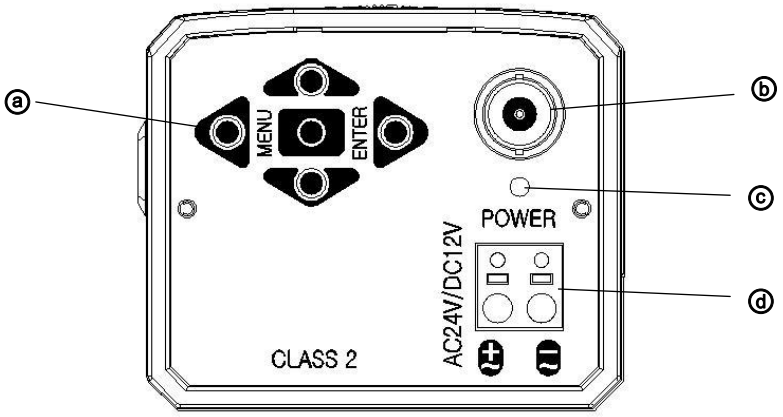

ⓐ OSD menu switches (Up/ Down/ Left/ Right / Enter)

ⓑ Video Output Connector (BNC)

ⓒ Power indicator LED

ⓓ Power Input Terminal

5. Installation and Commissioning Instructions

- Make sure the power is removed before the installation.
- To apply power:

  First connect the low voltage (DC12V or AC24V). Then plug the AC adapter to AC outlets to avoid an improper reset from power jitter and a damage from the surge voltage when no load.

5.1. Attaching the lens

- Remove the Dust Protection cap from the lens mount
- Screw the lens onto the camera without using force

5.2. Setting the back focus lock

The back focus is the distance between the lens support on the camera and the image sensor. Optimum focus is only possible when the correct distance is set. It may be necessary to set the back focus in individual cases due to production tolerances of the lens. The iris of the lens must be open as wide as possible. (Smallest F value) to set the back focus. For lenses with automatic iris control, you will require an ND filter (gray filter) to prevent the iris from closing in bright light.

Setting for lenses with a fixed focal distance

If the focus cannot be set exactly by turning the focus ring (lens), please proceed as follows:

1. Point the camera at an object with sufficient contrast. The distance to the object should be longer than 1,000 x the focal distance.
2. Open the iris on the lens
3. Set the focus of lens so that the distance at the lens is close to infinity but not to exact infinity position.
4. Loosen Back focus Adjustment Lock: Screw one~two turns on the camera with industrial “+” driver
5. Rotate Back Focus Adjustment until the optimum focus is achieved.
6. Tighten Back focus Adjustment Lock Screw again.
7. Trim the focus precisely at lens if necessary.

Setting for lenses with a variable focal distance (zoom):
If the focus changes as the focal distance changes, please proceed as follows:

1. Point the camera at an object with sufficient contrast at a distance of approximately 2 meters
2. Open the iris on the lens
3. Set the maximum focal distance (Tele) at the lens
4. Set the optimum focus with the focus ring
5. Set the smallest focal distance (wide angle)
6. Loosen Back focus Adjustment Lock. Screw one~two turns on the camera with the industrial “+” driver
7. Adjust Back Focus Adjustment until the optimum focus is achieved. Steps 3,4,5 and 7 may need to be repeated several times to obtain the best results
8. Tighten Back focus Adjustment Lock Screw again

5.3. Installation

The camera has a 1/4” thread insert on its top and bottom sides for mounting the camera to a tripod, wall or ceiling with a corresponding mount.

5.4 Commissioning

- First, connect the power supply to the power terminal on the rear panel of camera
- Second, plug the power adaptor to the main supply
- © Power indicator LED will be lit
- The camera is ready for operation

5.5. Power Supply Connections

Camera can work with either 24VAC or 12VDC, dual voltage power. It does NOT require the polarity-matched connection for 12VDC supply. Primary and secondary grounds are completely isolated to avoid the possible ground-loop problems. Its excellently wide operating voltage range of 10.5V-30V for DC and 12-28.8V for AC gives extra flexibility at the installation.

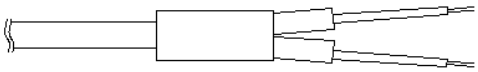

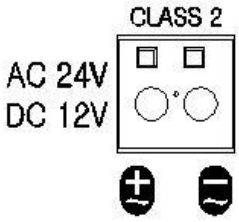

6. SETUP menu

6.1 In the menu

Use , buttons to move the cursor and , buttons to change the settings.
Press button to select or enter. button stands for MENU or ENTER button.

6.2 MAIN menu

Follow the chart for submenu settings

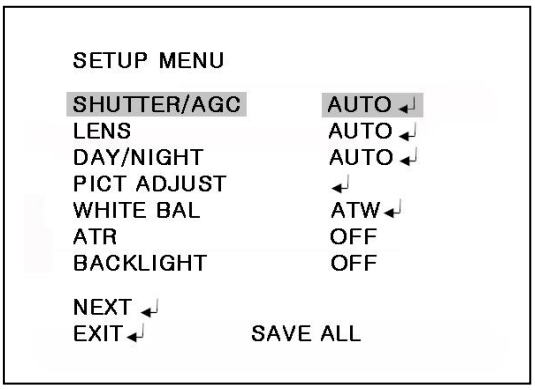

MAIN menu-1

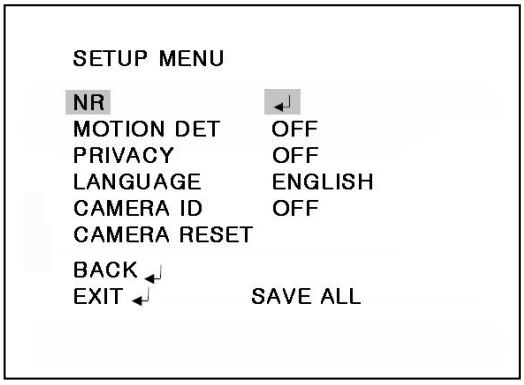

MAIN menu-2

6.2.1 MAIN menu-1

MAIN menu-1	Default	Descriptions
SHUTTER /AGC	AUTO	Sets the parameters related to the shutter mode and AGC for AUTO and MANUAL settings. See '6.3 SHUTTER/AGC menu' for details.
LENS	AUTO	Selects the lens type, AUTO or MANUAL. AUTO supports DC auto-iris lens only. See '6.4 LENS menu' for details.
DAY/NIGHT	AUTO	Sets DAY/NIGHT mode to AUTO, COLOR or B/W. **AUTO** – Camera switches DAY from/to NIGHT automatically. BURST, DELAY CNT, DAY→NIGHT, NIGHT→DAY can be set. See '6.5 DAY/NIGHT menu' for details. **COLOR** – Day/Night is disabled and forces to DAY mode only. **B/W** – Day/Night is disabled and forces to NIGHT mode only. Camera removes IR cut filter and switches to B/W.
PICT ADJUST	-	Sets MIRROR, BRIGHTNESS, CONTRAST, SHARPNESS, HUE or GAIN. See '6.6 PICT ADJUST menu' for details.
WHITE BAL	ATW	Sets ATW, PUSH, USER1, USER2, ANTI CR, MANUAL or PUSH LOCK. See '6.7 WHITE BAL menu' for details.
ATR	OFF	Sets ON/OFF for enabling/disabling ATR (Adaptive Tone Reproduction) compensation for the better dynamic range of the image. See '6.8 ATR menu' for adjusting the dynamic ranges.
BACKLIGHT	OFF	Selects BACKLIGHT mode out of OFF, HLC or BLC. Areas and gains for HLC and BLC are factory preset and not user adjustable.
NEXT		Moves to MAIN menu-2.
EXIT		Exits the setup menu. To save the changes, move cursor to 'SAVE ALL' and press button before exiting the setup menu.
SAVE ALL		Saves all parameters by pressing button.

6.2.1 MAIN menu-2

MAIN menu-2	Default	Descriptions
NR	-	Sets the noise reduction parameters for NR MODE, Y LEVEL and C LEVEL. See '6.9 NR menu' for details.
MOTION DET	OFF	Sets ON/OFF for enabling/disabling MOTION DET. See '6.10 MOTION DET menu' for the parameter settings.
PRIVACY	OFF	Sets ON/OFF for enabling/disabling PRIVACY. See '6.11 PRIVACY menu' for the parameter settings.
LANGUAGE	ENGLISH	Selects the language out of 7 languages.
CAMERA ID	OFF	Sets ON/OFF for enabling/disabling of ID display. Factory default ID is this version of the camera. User programmed camera ID will be lost and restored with Factory default ID after CAMERA RESET. See '6.12 ID menu' for editing ID.
CAMERA RESET		Restores FACTORY DEFAULT. To save the restored parameters, move cursor to 'SAVE ALL' and press button before exiting the setup menu.
BACK		Returns to MAIN menu-1.
EXIT		Exits the setup menu. To save the changes, move cursor to 'SAVE ALL' and press button.
SAVE ALL		Saves all settings by pressing button.

6.3 SHUTTER/AGC menu

This menu offers how to control/select SHUTTER, AUTO IRIS and AGC to get the best image for the high luminance and the low luminance according to the scene.

For example, to reduce the wash out and extend the dynamic range for the highlight scene, it is improved by SHUTTER+AUTO IRIS in the outdoor daylight. This mode may show color rolling or the video level hunting problem in certain lighting condition such as fluorescent lights.

Flickerless mode reduces the flickers by NTSC camera under 50Hz light or PAL camera under 60Hz light. MAIN> SHUTTER/AGC> MANUAL> SHUTTER must be set to 1/100 (NTSC), 1/120 (PAL) and MAIN> SHUTTER/AGC> AUTO> MODE to AUTO IRIS. Normal shutter speed with an auto iris lens should be set to 1/60 (NTSC) and 1/50 (PAL) for the best sensitivity.

To enter SHUTTER/AGC menu, press button at MAIN **menu-1**>SHUTTER/AGC.

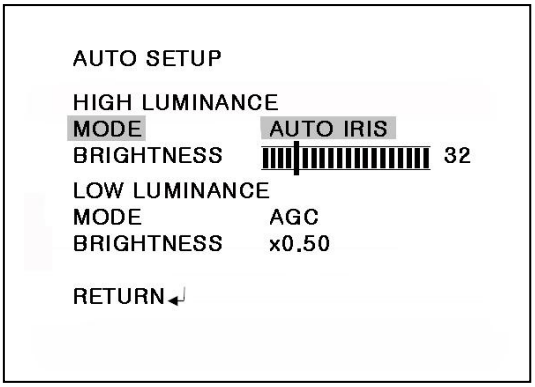

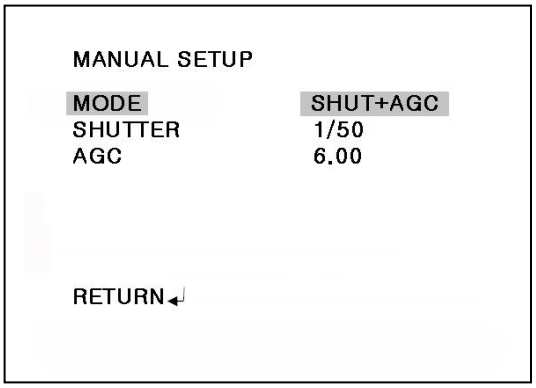

6.3.1 SHUTTER/AGC>AUTO SETUP menu

AUTO SETUP		Default	Descriptions
HIGH LUMINANCE	MODE	AUTO IRIS	Selects the shutter mode from AUTO IRIS or SHUT+AUTO IRIS when MAIN>LENS>AUTO but it is fixed to SHUT if MAIN>LENS>MANUAL. **AUTO IRIS** - Light level is controlled by an auto iris lens only. For proper auto iris operation, the auto iris operation mode in MAIN> LENS>AUTO>MODE must be set to AUTO. The shutter speed is fixed to the setting at MAIN>SHUTTER/AGC> MANUAL> SHUTTER in this mode. Set SHUTTER to 1/60 (NTSC) or 1/50 (PAL) for the best sensitivity unless it is in Flickerless mode. To set Flickerless mode: MAIN>SHUTTER/AGC>MANUAL>SHUTTER must be set to 1/100 (NTSC), 1/120 (PAL) and MAIN>SHUTTER/AGC> AUTO>MODE to AUTO IRIS. **SHUT+AUTO IRIS**- Light level is controlled by the combination of an auto iris lens and shutter control to improve the highlight from wash-out and extend the dynamic range. Shutter speed can vary between 1/60(1/50)~1/10,000sec. This mode enhances the overall video quality of daylight but may show a smeared image in bright spotlights. However, color rolling or video level hunting may occur under a certain lighting condition such as fluorescent lights.
	BRIGHT-NESS	032	Adjusts the brightness of the image by an auto iris lens or a shutter speed control + an auto iris lens.
LOW LUMINANCE	MODE	AGC	Sets AGC to compensate the video level when the scene is dim.
	BRIGHT-NESS	x0.50	Sets the brightness level which starts AGC from x0.25, x0.50, x0.75 and x1.0 of full video level. If set to x0.50, the camera will start AGC when the video level goes down to below the 50% level.

NOTICE : The setting AUTO IRIS at SHUTTER/AGC>AUTO SETUP>HIGH LUMINANCE MODE will be changed to SHUT+AUTO IRIS if MAIN menu-1>LENS is changed to MANUAL.

As a result, the lens iris can NOT be fully opened when MAIN menu-1>LENS>AUTO IRIS> MODE is OPEN.

This can be recovered by setting SHUTTER/AGC>AUTO SETUP>HIGH LUMINANCE MODE to AUTO IRIS.

6.3.2 SHUTTER/AGC>MANUAL SETUP menu

MANUAL SETUP	Default	Descriptions
MODE	SHUT +AGC	Compensates the video level by the manual shutter control and AGC.
SHUTTER	1/60 (1/50)	Sets the manual shutter to 1/60(1/50), 1/100(1/120), 1/250,1/500,1/1000, 1/2000,1/4000 or 1/10000. Manual shutter is only useful when luminance is unchanged.
AGC	6.00	Sets AGC gain in dB. Higher gain compensates for a brighter scene, but noise increases. Manual AGC can be set to 6, 12, 18, 24, 30, 36, 42 or 44 8dB.

6.4 LENS menu

To enter LENS menu, press button at MAIN **menu-1**>LENS>AUTO.

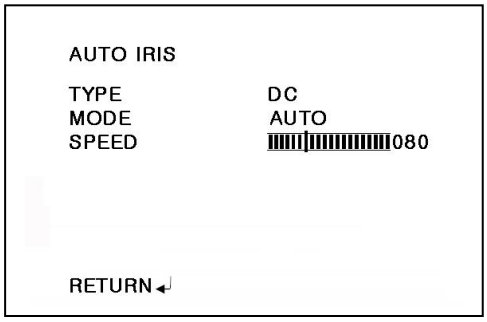

AUTO IRIS	Default	Descriptions
TYPE	DC	**MUST BE SET TO DC ONLY**. This camera does NOT support video type auto iris lens.
MODE	AUTO	**AUTO** – Lens iris is automatically controlled according to the scene's light level. **OPEN** – Lens is fully opened regardless of the light level. **CLOSE** – Lens is fully closed.
SPEED	080	Adjusts the iris control speed. The lower the value, the faster the speed. If the speed is too slow or fast, the iris control may be unstable.

6.5 DAY/NIGHT menu

To enter DAY/NIGHT menu, press button at MAIN **menu-1**>DAY/NIGHT

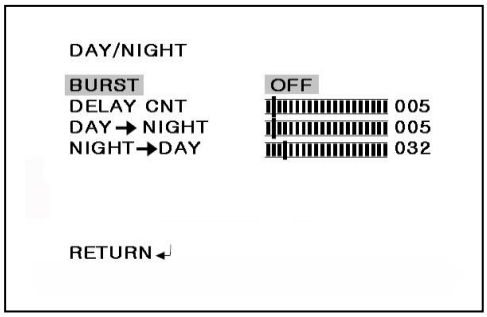

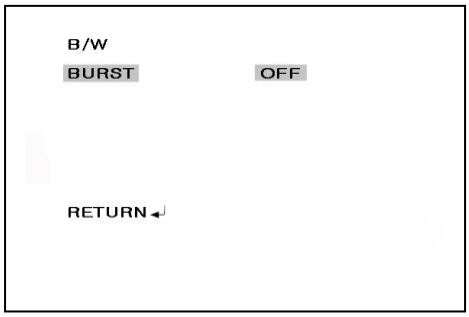

IMPORTANT ACTIVITY!!!

DAY->NIGHT and NIGHT->DAY operations must be examined and verified at the final installation.

Block the lens for a few seconds for NIGHT mode, then release and let it return to DAY mode.
If camera stays at NIGHT mode for more than 10sec, slightly increase 'N→D THRES' and repeat the fore-mentioned steps.
If the scene is too dim or the lens iris was adjusted too low (near close), it may not return to DAY.

DAY/NIGHT	Default	Descriptions
BURST	OFF	**BURST** mode contains color burst signal when the camera switches to B/W. ON mode maintains the same color signal in B/W so that the video signal provides better compatibility with certain color equipment. OFF mode removes the color burst signal B/W video and increase the total TV lines.
DELAY CNT	005	**DELAY CNT** is the time in seconds before Day↔Night switches. DELAY can avoid the unwanted/frivolous switching of short term lights such as light from a passing car.
DAY→NIGHT	005	**DAY→NIGHT** mode sets a threshold level to determine when switch from DAY to NIGHT. Lower (Higher) value makes the camera switched from Day to Night at lower (higher) illumination. If the camera stays in Color at night time, increase **DAY→NIGHT** threshold value until it just switches to Night. **CAUTION If the value between DAY→NIGHT and NIGHT→DAY is minimal, then camera may switch between DAY and NIGHT mode repeatedly.**
NIGHT→ DAY.	3	**NIGHT→DAY** mode sets a threshold level to determine when to switch from NIGHT to DAY. Lower (Higher) value makes the camera switched from Night to Day at lower (higher) illumination. If the camera stays in B/W mode during day time, decrease **NIGHT→DAY** threshold value until it switches to Day. **CAUTION If the value between DAY→NIGHT and NIGHT→DAY is minimal, then camera may switch between DAY and NIGHT mode repeatedly.**

6.6 PICT ADJUST menu

To enter PICT ADJUST menu, press button at MAIN **menu-1**>PICT ADJUST.

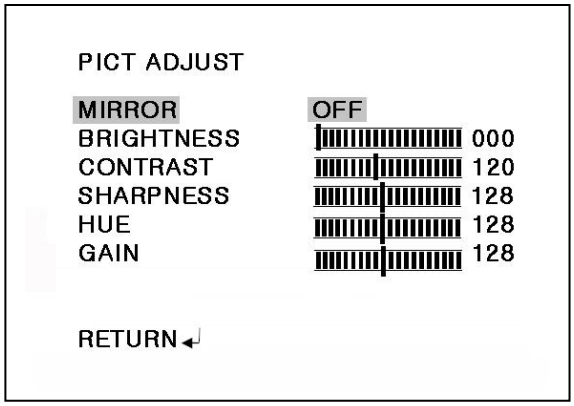

PICT ADJUST	Default	Descriptions
MIRROR	OFF	Picture will be flipped horizontally if it turns ON.
BRIGHTNESS	000	Increases or decreases the brightness of the picture. This is different from that of DC iris lens because it simply increases or decreases the digital gain of the video. Do not increase this too much or the dynamic range for the highlight area will decrease.
CONTRAST	120	Increases or decreases the contrast of the picture.
SHARPNESS	128	Increases or decreases the sharpness of the picture. Too much sharpness can make the image too harsh and show more noise as well as line flicker at the edge of object in the picture.
HUE	128	Adjusts hue for NTSC version only.
GAIN	128	Increases or decreases the color gain of the picture.

6.7 WHITE BAL menu

White balance can be set to ATW, PUSH, USER1, USER2, ANTI CR, MANUAL or PUSH LOCK.
ATW (Auto Tracking White balance) and PUSH (Full pull-in) are continuously monitoring/analyzing the color temperature of the incoming light and correcting the white balance.

ATW limits the color temperature range at about 2,500˚K~8,500˚K to reduce the excessive compensation for the big object which has a single color.
PUSH has no limits between about 1,800˚K~10,500˚K but it may over-compensate the white balance for the big object which has a single color.

In cases where it goes under 2,500˚K such as halogen light, ATW may stop. If so, PUSH mode is recommended.

USER1 and USER2 are a fixed white balance which is user-programmable by R-GAIN and B-GAIN and useful only for the steady light.

ANTI CR (Anti Color Rolling) can reduce color rolling under the fluorescent light when the camera operates in shutter control without an auto iris lens. (NTSC version only)

MANUAL white balance is a kind of fixed white balance which is user-programmable by B-GAIN.
(R-GAIN will be automatically adjusted in accordance with B-GAIN) and useful only for the steady light.

PUSH LOCK is a fixed white balance where the white balance is compensated only while the button is pressed at MAIN>WHITE BAL>PUSH LOCK and finishes the white balance when button is released.

To enter ATW (MANUAL) menu, press button at MAIN **menu-1**>WHITE BAL>ATW(MANUAL).

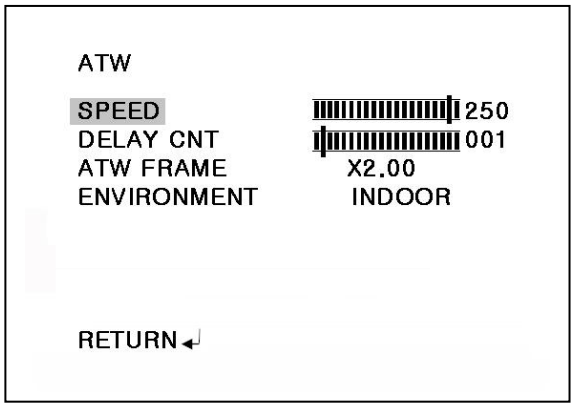

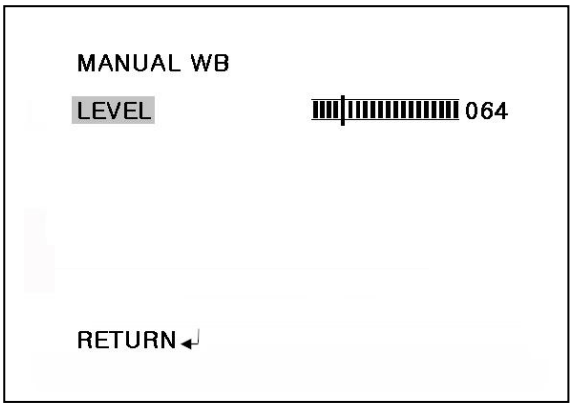

ATW	Default	Descriptions
SPEED	250	Sets the AWB compensating speed. Lower value makes AWB faster. **CAUTION** Too fast an AWB may force color oscillation.
DELAY CNT	001	Adjusts the AWB compensation period to next update of AWB. The smaller value will update AWB more frequently (faster).
ATW FRAME	X2.00	Determines the ATW range with respect to the fundamental range. A higher value than x1.00 extends the ATW range at lower and higher color temperature.
ENVIRON-MENT	INDOOR	Selects INDOOR or OUTDOOR. Their ATW is optimized for the limited application and cannot cover. **INDOOR** - Optimized for Indoor installation and compensates ATW for low color temperature such as incandescent lights. **OUTDOOR** - Optimized for outdoor sunlit applications and compensates ATW for high color temperature such as daylight.

MANUAL WB	Default	Descriptions
LEVEL	064	Manual White Balance Adjustment value.

6.8 ATR (Adaptive Tone Reproduction) menu

The ATR feature improves the dynamic range and the visibility of the image by providing the optimal gradation compensation of the image in one field. This is achieved by two ways of image processing, luminance compression and contrast enhancement, so that the tone can be enhanced at highlighted and dark areas.

To enter ATR menu, press button at MAIN **menu-1**>ATR.

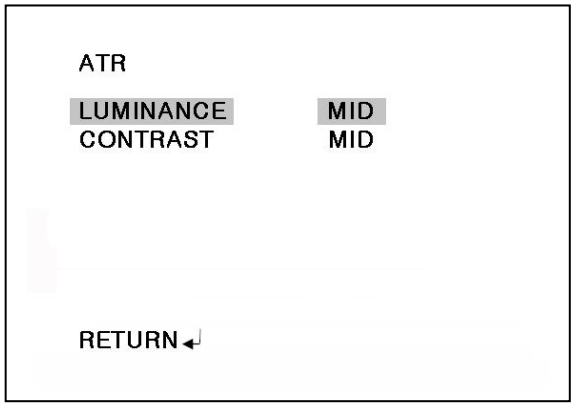

ATR	Default	Descriptions
LUMINANCE	MID	Compresses the highlighted area and enhances the dark area so that the entire image can converge toward the medium level. LOW will compensate minimally and HIGH will average out the image. With setting HIGH, the image may look less contrastive and noise may increase in the dark area.
CONTRAST	MID	Adjusts the strength of the image contrast. If set to too high, the dark area may lose detail and the high luminance area may saturate.

6.9 BACKLIGHT menu

To enter BACKLIGHT menu, press button at MAIN **menu-1**>BACKLIGHT.

6.10 NR menu

To enter NR menu, press button at MAIN **menu-2**>NR.

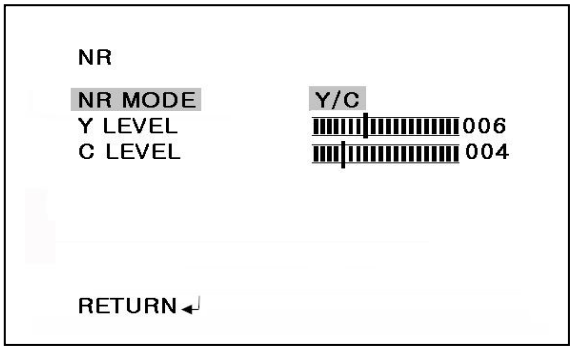

NR	Default	Descriptions
NR MODE	Y/C	Selects OFF, Y, C or Y/C which noise reduction is performed with.
Y LEVEL	006	Indicates the noise reduction strength for the luminance signal. Higher value performs stronger noise reduction and makes the image less sharp. Due to the limitation of 2D NR, noise reduction may not be effective enough.
C LEVEL	004	Indicates the noise reduction strength for the chrominance signal. Higher value performs stronger noise reduction and makes the image less sharp. Due to the limitation of 2D NR, noise reduction may not be effective enough.

6.11 MOTION DET menu

Up to 4 motion detection areas are available and each area is programmable in size and location.
The motion is displayed by means of blocks when MAIN **menu-2**>MOTION DET and MOTION DET>BLOCK DISP are ON.

To enter MOTION DET menu, press button at MAIN **menu-2**>MOTION DET>ON.

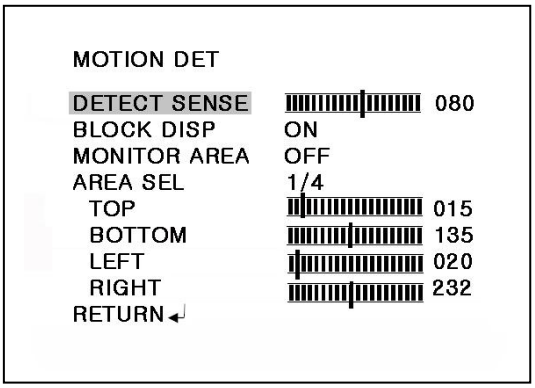

MOTION DET	Default	Descriptions
DETECT SENSE	080	Adjusts the sensitivity for detecting motion. A higher value is more sensitive.
BLOCK DISP	ON	Enables or disables displaying blocks for the area where the motion is detected.
MONITOR AREA	OFF	Displays four motion windows as programmed in sizes and positions.
AREA SEL	1/4	Selects AREA1~AREA4 to be adjusted. TOP (BOTTOM) - button moves up and button moves down the top (bottom) border of the selected window at AREA SEL. LEFT (RIGHT) - button moves left and button moves right the left (right) border of the selected window at AREA SEL

6.12 PRIVACY menu

Up to 8 privacy areas are available and each area is programmable in size and location.
The number of privacy areas is limited to four when MOTION DET>MONITOR AREA is ON.
The privacy areas are masked with the color selected by PRIVACY>COLOR.

To enter PRIVACY menu, press button at MAIN **menu-2**>PRIVACY>ON.

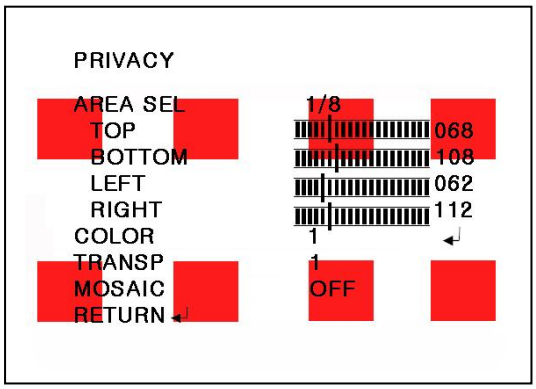

PRIVACY	Default	Descriptions
AREA SEL	1/8	Selects one of AREA1~AREA8 to be adjusted. TOP(BOTTOM) - button moves up and button moves down the top (bottom) border of the selected window at AREA SEL. LEFT(RIGHT) - button moves left and button moves right the left (right) border of the selected window at AREA SEL
COLOR	1	Sets one of 8 colors for the selected mask window at AREA SEL.
TRANSP	1.00	Transparency rate for the mask can be adjusted. 0.00 - Mask is fully transparent and not visible. 0.50 - Mask is 50% transparent. 0.75 - Mask is 25% transparent. 1.00 - Mask is not transparent.
MOSAIC	OFF	Enables or disables the mosaic effect for the selected mask window at AREA SEL

6.13 LANGUAGE menu

Seven languages, ENGLISH ,JAPANESE, DEUTCH, FRANCAIS, RUSSIAN, PORTUGUES and ESPANOL, are available with this camera.

6.14 CAMERA ID menu

Up to 40 characters can be input for camera ID.

To enter CAMERA ID menu, press button at MAIN **menu-2**>CAMERA ID.

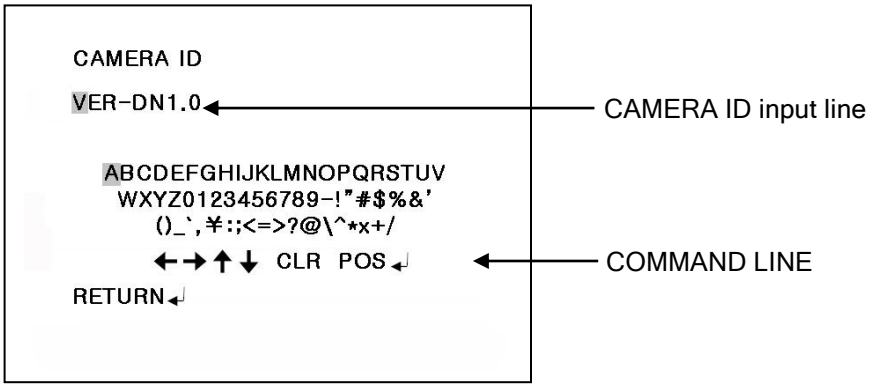

Use , , , buttons to move a block cursor in character table and press button to input the selected character.

To move the character input position on CAMERA ID input line, move a cursor to ←→ on COMMAND LINE and press button on ← or →.
To clear CAMERA ID input line, move a cursor to CLR on COMMAND LINE and press button.
To set the location of CAM TITLE to be displayed on the monitor, move a cursor to POS and press button. Then, the menu will disappear and the CAMERA ID will be displayed on the monitor.

Move CAMERA ID by using , , , buttons and press button to fix.
Menu will appear again.
To finish CAM TITLE menu, press button on RET on command line.

6.15 CAMERA RESET

Camera loads Factory defaults.
To save them, go to SAVE ALL and press button.

6.16 EXIT

Exits SETUP MENU and returns to the normal display

7. Specifications

Model name	**VTC-C770DN**	**VTC-C770DN/PAL**
Image Device	1/3” Sony High Density EXVIEW CCD	
Image Processor	Sony Effio Digital Signal Processor	
Effective Pixels	976(H) x 494(V)	976(H) x 582(V)
Scan Frequency	59.94Hz(V), 15.734Khz(H)	50Hz(V), 15.625Khz(H)
Synchronization	Internal	
H. Resolution	700TV Lines	
Sensitivity	0.0003Lux at F1.2@50IRE	
S/N Ratio	More than 50dB with AGC OFF at 50IRE	
White Balance	1,800 ~ 10,500ºK Automatic tracking	
Scan System	2:1 Interlace	
Motion Detection	YES (24 x 16 BLOCK ALARM AREA)	
Privacy Mask	8 mask	
Adaptive Tone Reproduction	[On or Off / Luminance – Low, Middle, High & Contrast – Low, Midlow, Midhigh, High]	
OSD Language	EN, FR, DE, ES, POR, SC, RUS, JP	
Day & Night	True Day and Night by ICR	
Lens Mount	C/CS (C-mount ring – optional)	
Video Output	VBS 1 Vpp +/- 10%, 75ohm	
Operating Power	24VAC/12VDC	
Operating Condition	-4’F ~ 122’F / -20’C ~ 50’C, 85% RH. Max. Non-condensing	
Dimension (W x H x L)	65mm x 55mm x 126mm (2.6in x 2.2in x 4.9in) About 400g/.9lb (Net)	

● Design and specifications are subject to change for product improvements without prior notice.

8. Dimensional Drawings

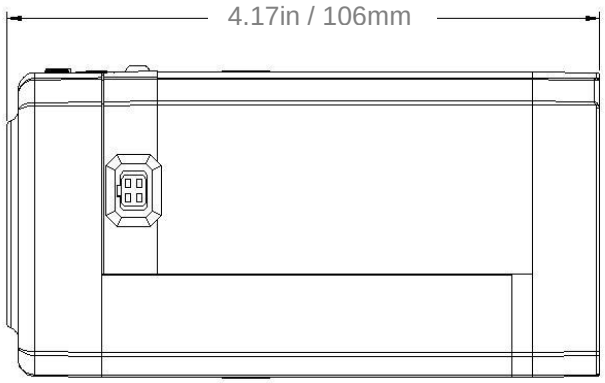

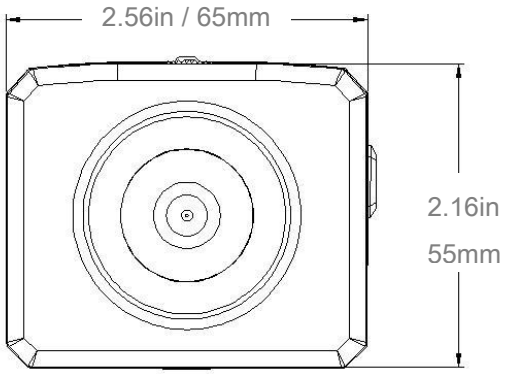

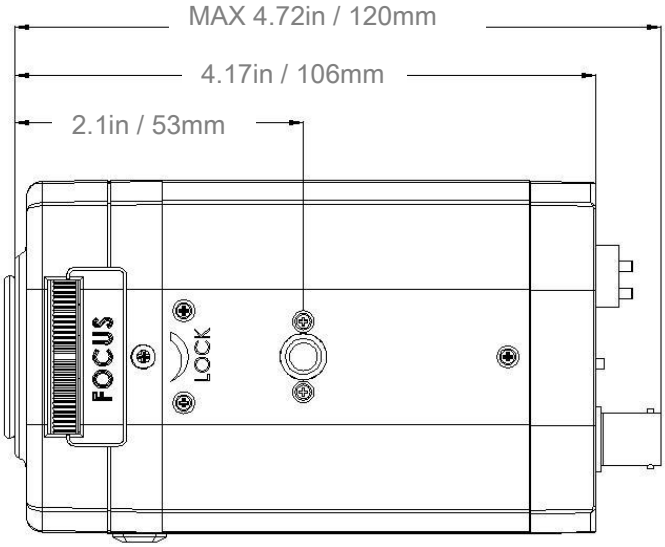

CHRONO Series

8 & 16 Channel Digital Video Recorders

Features:

- Highly efficient H.264 compression
- Built-in Data Redundancy
- Real-time recording and real-time playback
- System Setup Wizard and User Friendly GUI
- Multi-Resolution recording
- 4 Spot Output (16 Channel)
- Highly efficient and stable proprietary Database Structure
- Identical GUI for DVR and client viewer
- Built-in Point-of-Sales support
- Web clients & CMS(Central Management Software) Included

IR Lens Series

1/3" DC A/I IR Corrected Lenses

All Vitek Varifocals are manufactured in Japan encompassing the very highest quality glass optics. Their compact design enables ease of installation in small domes and outdoor camera enclosures. Locking screws make it easy to set and maintain focus settings.

VT-EH10PK

Indoor/Outdoor Camera Enclosure & Wall Mount Combo

Features:

- Heavy-Duty Beige Aluminum Construction
- Adjustable Camera Tray & Lockable Rear Latch
- Top Swings Open For Ease In Servicing
- Housing Dimensions: 15.5"L x 5.8"W x 4.3"H (With Visor) / Wall Mount Dimensions: 8.8"L x 2.9"W x 4.5"H
- Heater & Blower Kit Available: B24-H24
- Tamper Resistant Mounting Screws
- Adjustable P/T Head

VITEK LIMITED PRODUCT WARRANTY

VITEK products carry a three (3) year limited warranty. VITEK warrants to the purchaser that products manufactured by VITEK are free of any rightful claim of infringement or the like, and when used in the manner intended, will be free of defects in materials and workmanship for a period of three (3) years, or as otherwise stated above, from the date of purchase by the end user. This warranty is non-transferable and extends only to the original buyer or end user customer of a VITEK Authorized Reseller.

The product must have been used only for its intended purpose, and not been subjected to damage by misuse, willful or accidental damage, caused by excessive voltage or lightning.

The product must not have been tampered with in any way or the guarantee will be considered null and void.

This guarantee does not affect your statutory rights.

Contact your local VITEK Reseller should servicing become necessary.

VITEK makes no warranty or guarantee whatsoever with respect to products sold or purchased through unauthorized sales channels. Warranty support is available only if product is purchased through a VITEK Authorized Reseller.

28492 CONSTELLATION ROAD VALENCIA, CA 91355
WWW.VITEKCCTV.COM | 888-VITEK-70